DIMENSIONS

Whistler

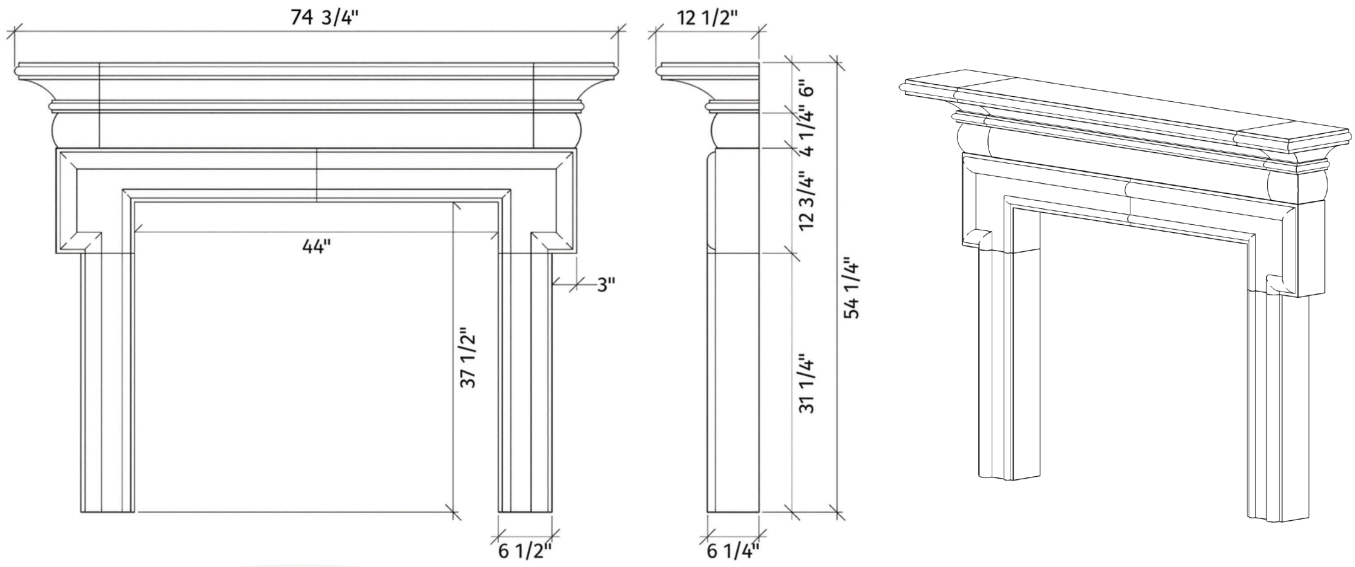

Classical. Details.

The **Whistler** mantel exemplifies architectural fireplace style.
Featuring a sweeping mantel that tucks into a tailored profile this design was inspired by the robust fireplace found in Winston Churchill's office.

Whistler *PACKAGE INCLUDES:*

- concrete mantel, undermantel, surround
- concrete infill panels
- colour-matched caulking

Surrounds ship pre-sealed

DreamCast
Design & Production

Please contact us at **1-604-278-4939** with any questions.

We also encourage you to explore our website at **www.dreamcastdesign.com**

Our experienced team can assist you with product information, installation and design recommendations.